MECHANICAL PROPERTIES OF INTUMESCENT COATING

Muhammad Yasir, Faiz Ahmad, Mokthar I Chee, Eugenio Onate

Introduction

For evaluating the mechanical strength of the coating and char, three different tests were performed. A scratch test was used to evaluate the hardness of the intumescent coating. However, the adhesion test was conducted to categorise the bonding strength between the intumescent coating and the steel substrate. Finally, the compression test was carried out to investigate the load-bearing capability of the char up to 3000 N force.

Lap Shear Test

The lap shear test is conducted to determine the shear strength of adhesives for bonding materials when tested on a single-lap-joint specimen. The thickness of the coating used for this test was 1.5 mm for all formulations with and without primer coating. According to ASTM 3163 [1], the Lap shear test was conducted with preload of 100N, and a speed of 0.05 mm/min, as shown in Figure 1. The test was conducted with five samples from each formulation to ensure accuracy in the data.

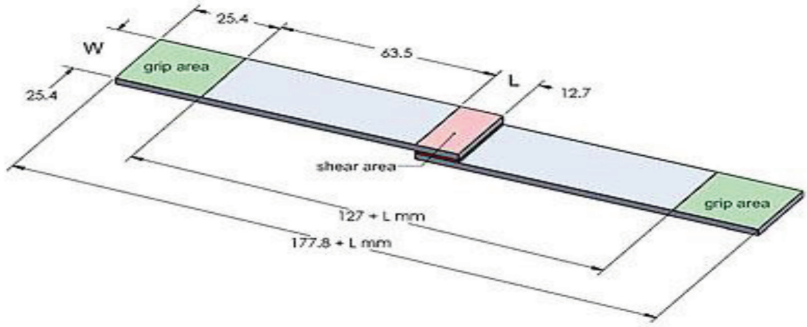

Figure 1 Schematic diagram of lap shear test [1]

To test the interfacial bonding strength between the intumescent coating and substrate and the primer coating with the substrate, the test samples are placed in the machine's grips and pulled at 0.05mm/min until it fails, or rupture occurs. There are two types of failures: either adhesive (the adhesive separates from one of the substrates) or cohesive (the adhesive ruptures within itself).

Lap Shear determines the shear strength of adhesives for bonding materials when tested on a single-lap-joint specimen. The test is applicable for determining adhesive strengths, surface preparation parameters, and environmental durability. Many ASTM single-lap-joint shear tests, including ASTM D1002, specify lap shear for metal to metal, ASTM D3163 for plastics joints, and ASTM D5868 for fibre reinforced plastics (FRP) against itself or metal. In this study, the lap shear test was performed according to ASTM D3163 with preload of 100N and speed of 0.05 in/min, and the thickness of the coating was 1.5 mm for all formulations. Figure 2 shows the shear strength of adhesives until failure.